Environmentally friendly photosensitive sensor

Product specifications

Customer	
Date	
Model	LLS05-A F5
Product number	

Make	
Approval	
Customer Signatures	

森霸传感科技股份有限公司

Sales center

5109 T3 32

Address: 32nd Floor,Tower T3,One Excellence,No.5109Menghai Avenue,Nanshan District, Shenzhen, China

Website www.nysenba.com

Tel 86-755-82594756 18929323299

Fax 86-755-82594762

Product function

1. (CdS) ROHS
   Replace Photoresistors(Cds),RoHS Compliance/Pb-free/Cd-free.
2. LCD
   adjust background light automatically,LCD,mobile phone,camera,Computer Camera etc.
3.
   Suitable for all kinds of light control products and light control toys,such as night lamp etc.
4.
   Applicable to all kinds of infrared monitoring products

Product Features

1. 520nm
   Peak sensitive wavelength 520nm
2.
   Low Power Consumption
3.
   High reliability
4.
   Perfect consistency, completely solve the problems of early start or poor consistency of the lamp.
5. +85 /65% 1000H
   Fast response, stable performance, no drift at 1000h starting point under + 85 / 65% humidity condition
6.
   Size customized, easy for Installation.

森霸传感科技股份有限公司

Product Dimensions

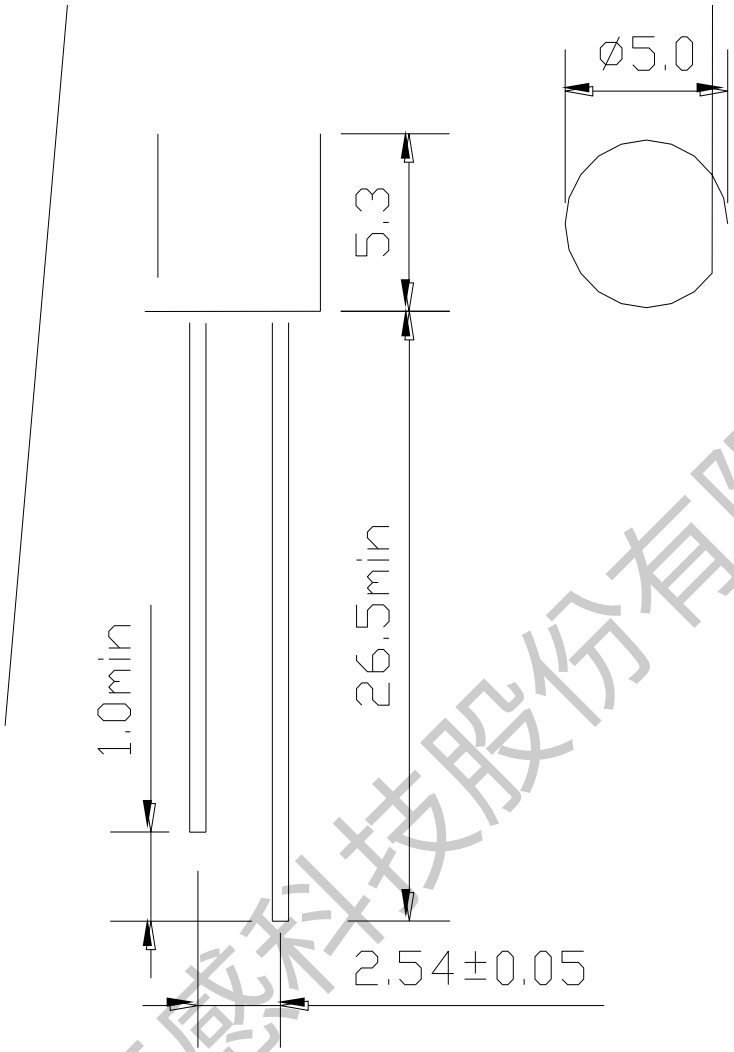

Note

1.

Long pin- Collector Short pin- Emitter

2. mm , ±0.15mm

Unit: mm± 0.15mm

3.

The appearance color of colloid shall be subject to the sample

4. **1.0mm**

Protruded resin under the base is 1.0mm maxium.

森霸传感科技股份有限公司

Typical photoelectric characteristics curves

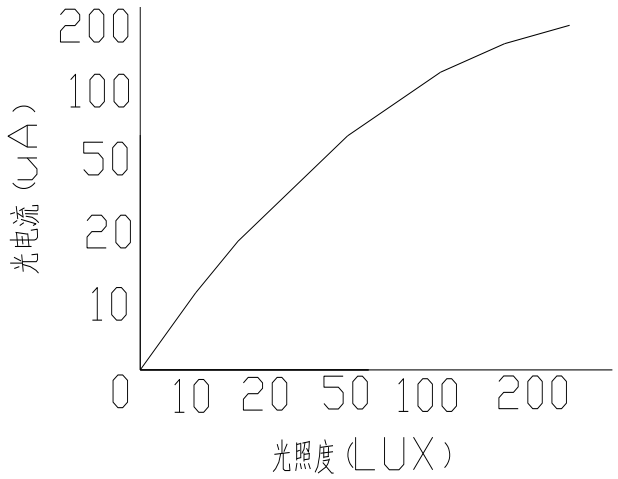

Change of illuminance and photocurrent

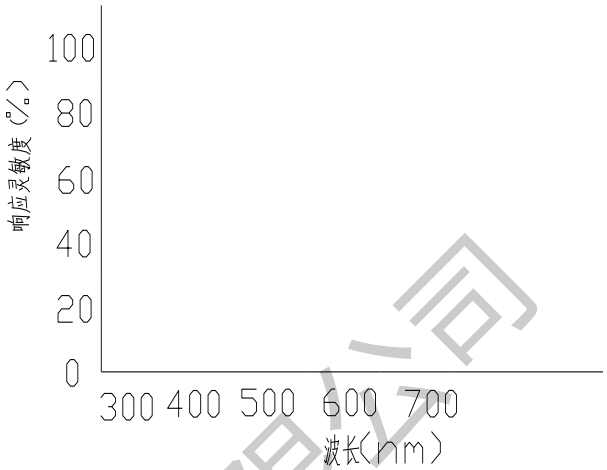

Photowavelength map

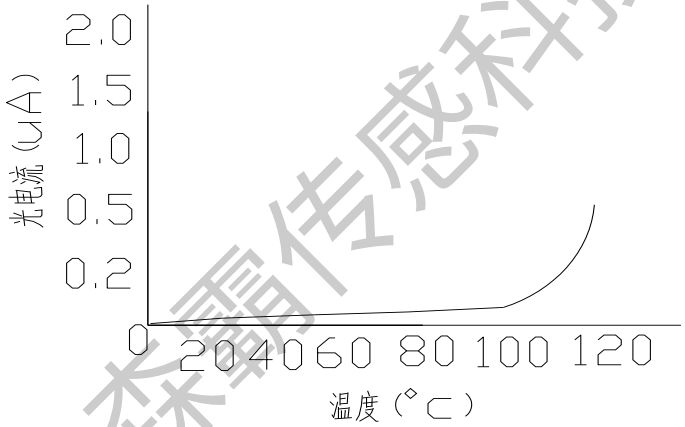

Temperature and photocurrent diagram

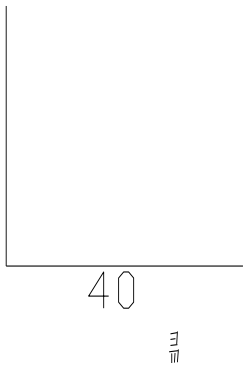

Temperature and dark current diagram

森霸传感科技股份有限公司

Recommended Soldering Conditions

Mode	Condition